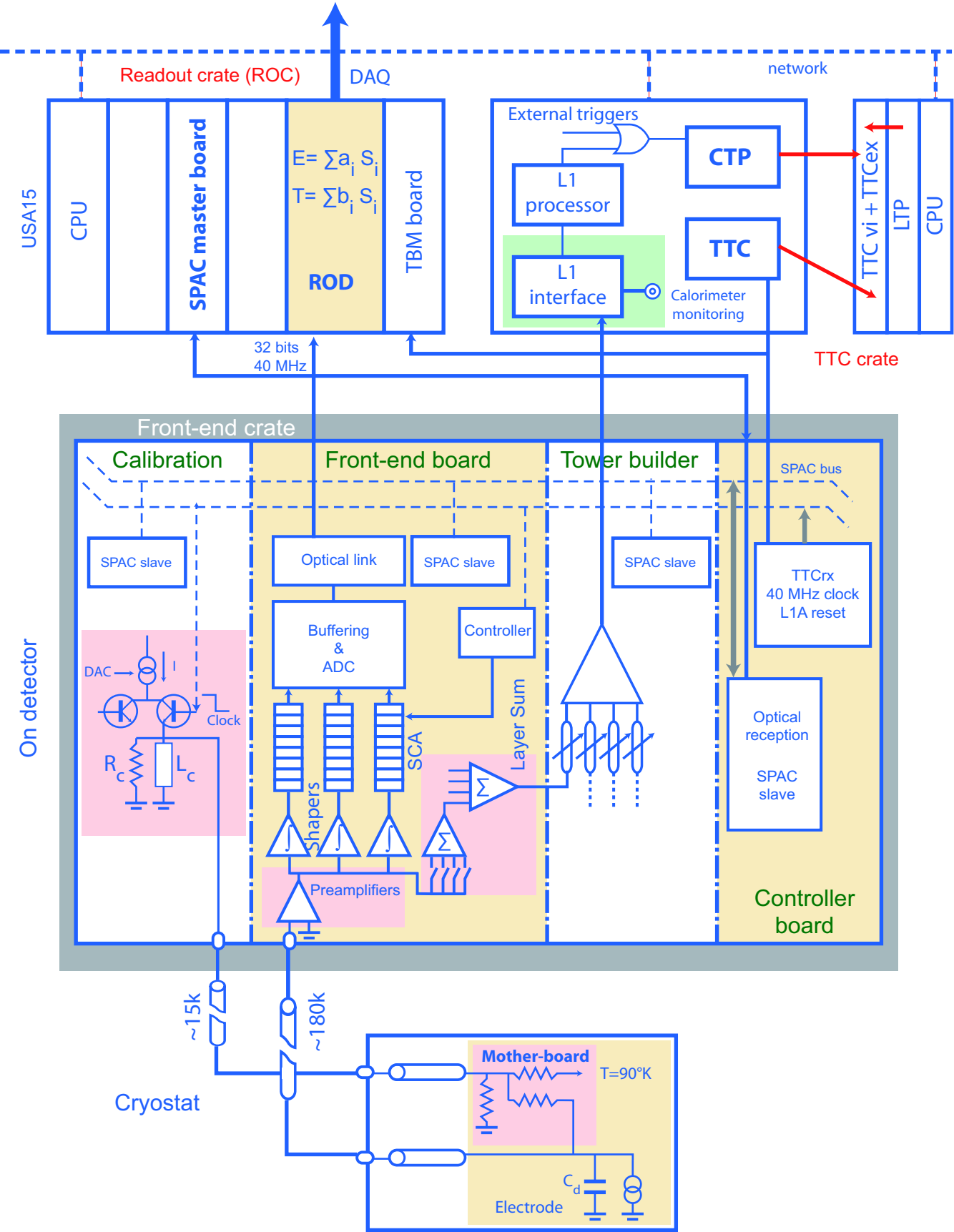
Readout crate (ROC)
DAQ
network
USA15
CPU
SPAC master board
E= ∑a_i S_i
T= ∑b_i S_i
ROD
TBM board
External triggers
L1 processor
L1 interface
CTP
TTC
Calorimeter monitoring
TTC vi + TTCex
LTP
CPU
TTC crate
32 bits
40 MHz
Front-end crate
Calibration
Front-end board
Tower builder
SPAC bus
SPAC slave
Optical link
SPAC slave
SPAC slave
TTCrx
40 MHz clock
L1A reset
Buffering
&
ADC
Controller
DAC
I
Clock
R_c
L_c
SCA
Layer Sum
Shapers
Preamplifiers
Optical
reception
SPAC
slave
Controller
board
On detector
~15k
~180k
Cryostat
Mother-board
T=90°K
C_d
Electrode