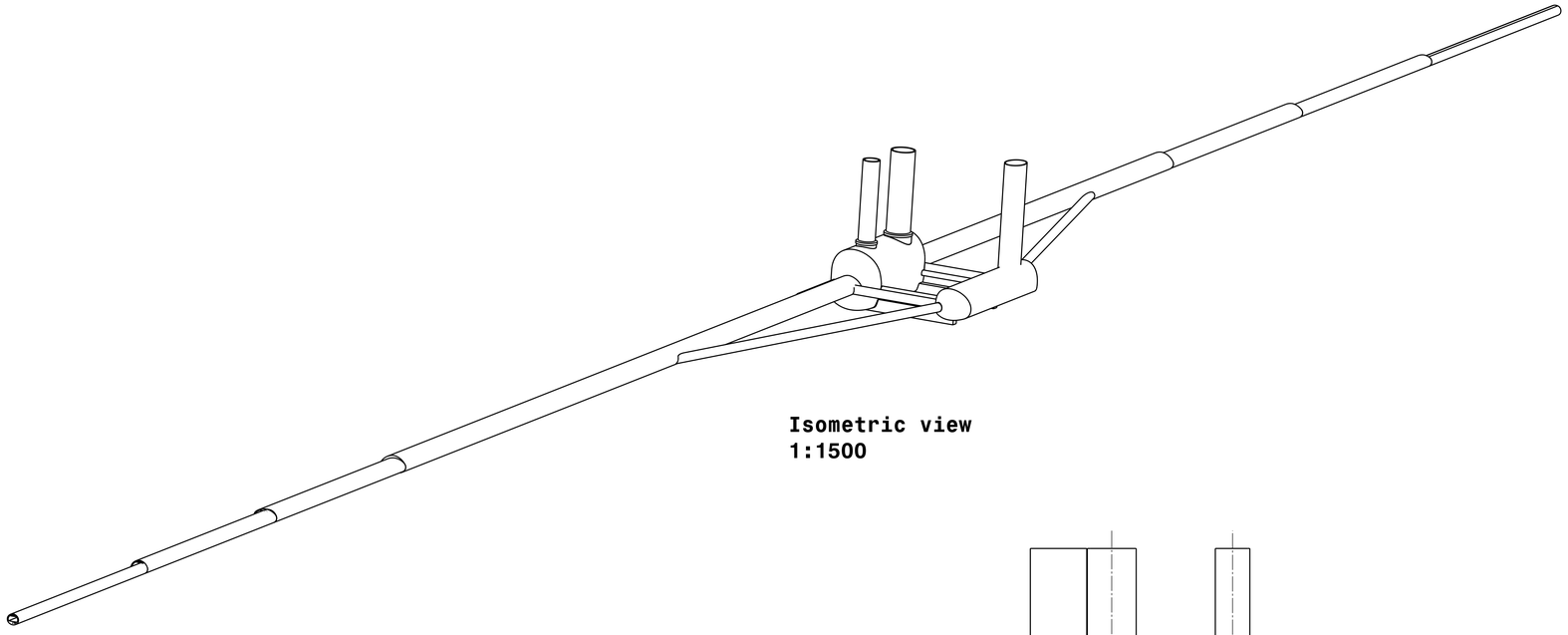

Isometric view
1:1500

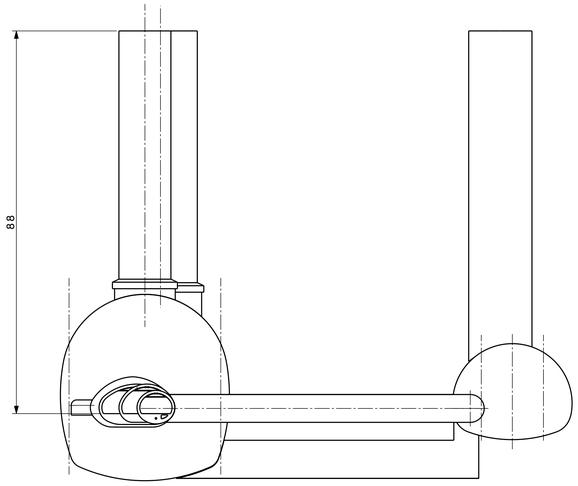

Front view
1:500

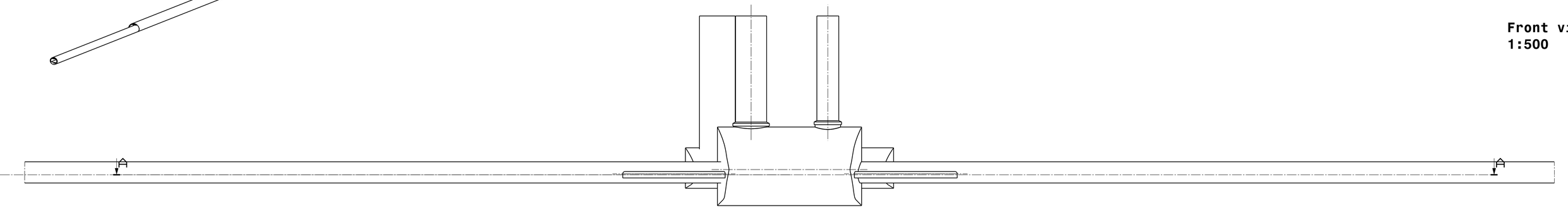

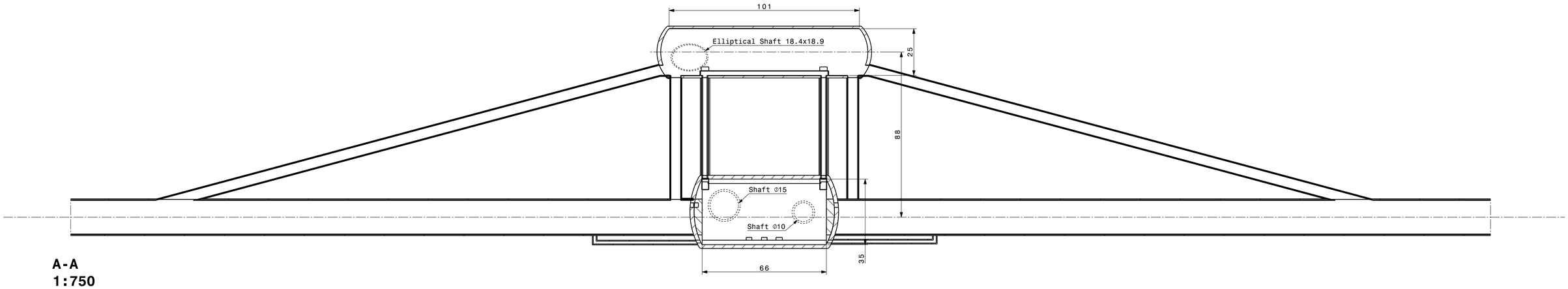

A-A
1:750