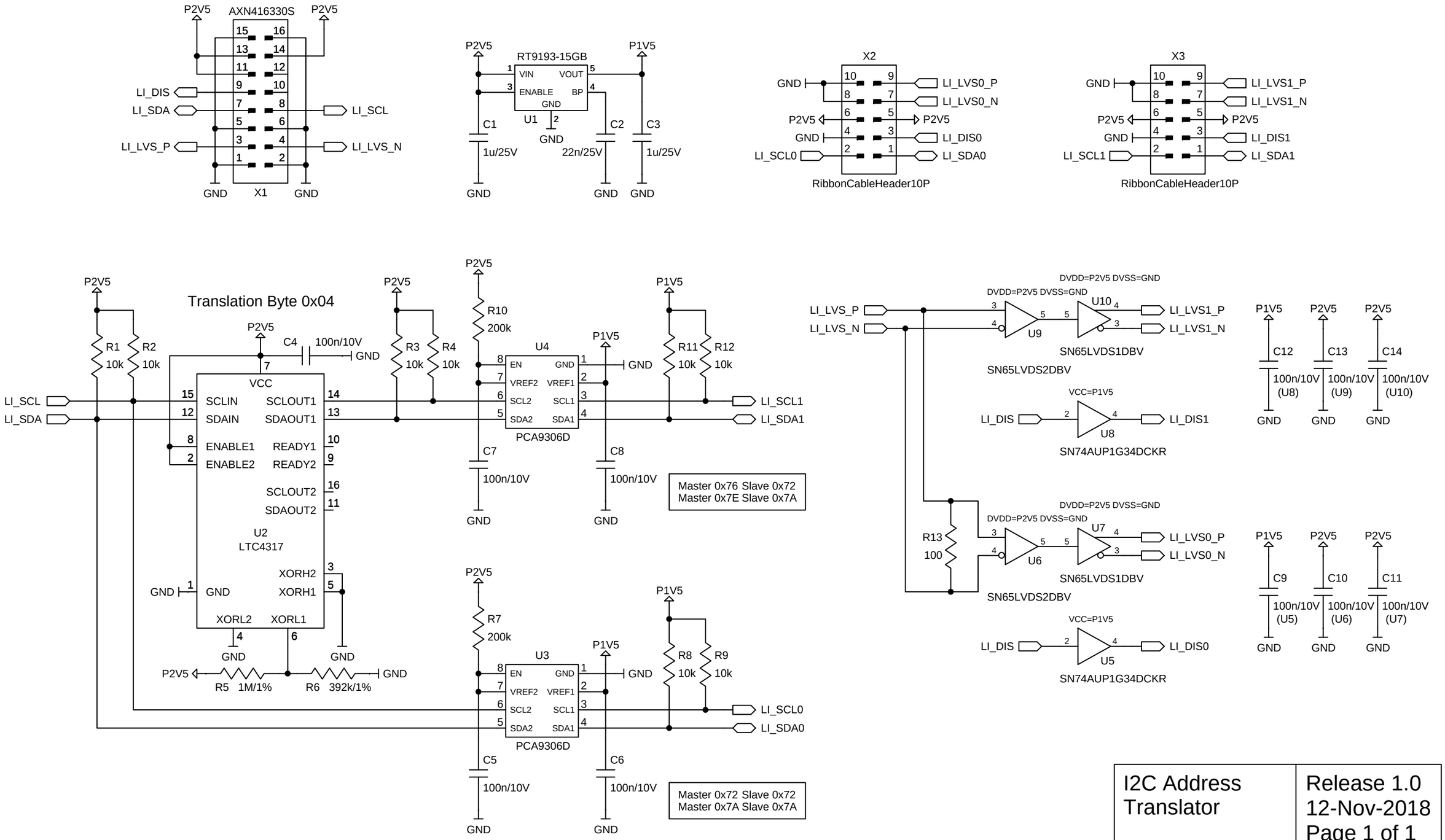

I2C Address Translator	Release 1.0 12-Nov-2018 Page 1 of 1
RWTH-Aachen - I. Phys.Inst.	