MT6

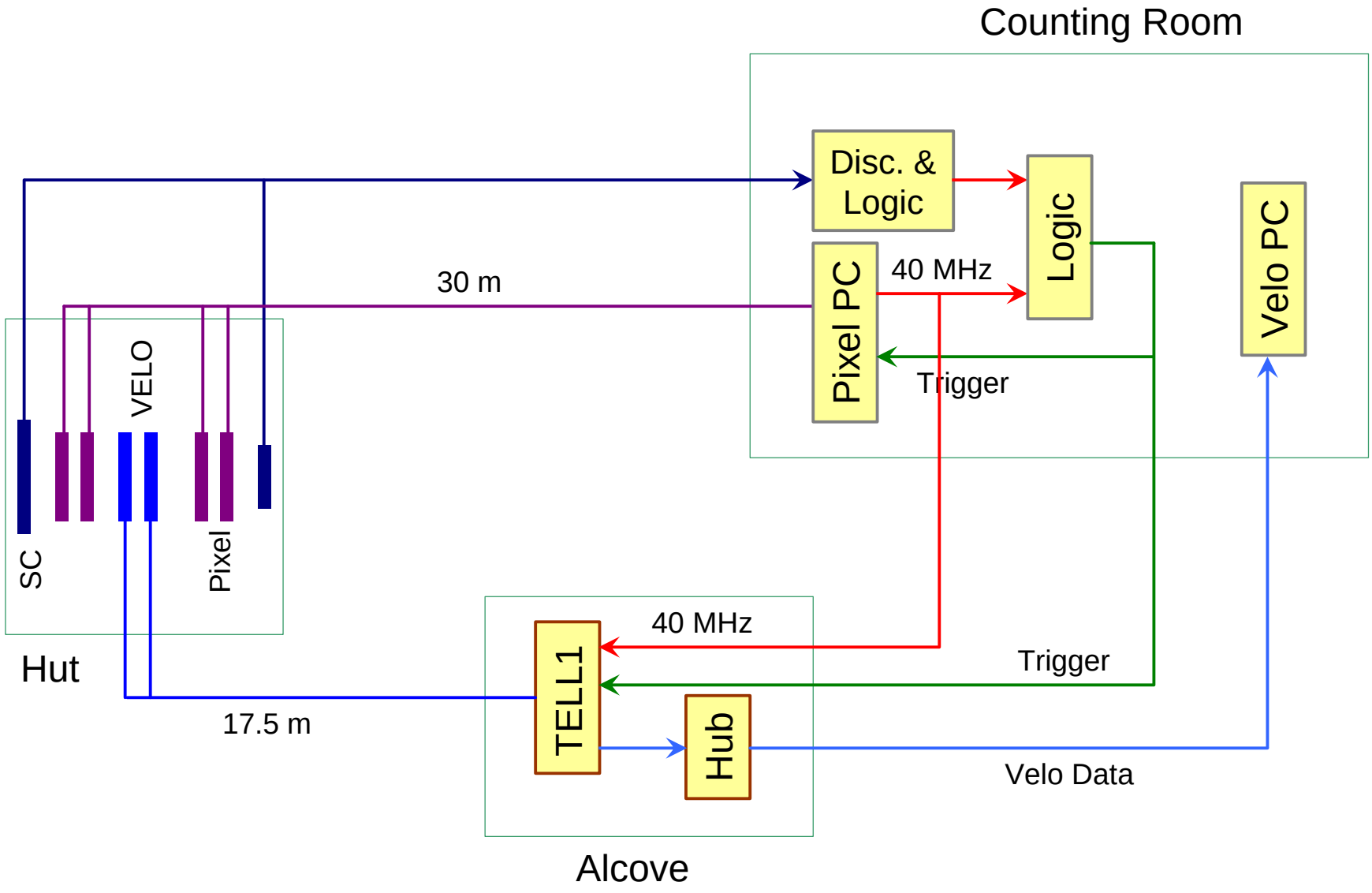
Counting Room
Disc. & Logic
Logic
Velo PC
Pixel PC
40 MHz
30 m
Trigger
VELO
SC
Pixel
Hut
40 MHz
Trigger
TELL1
Hub
17.5 m
Velo Data
Alcove