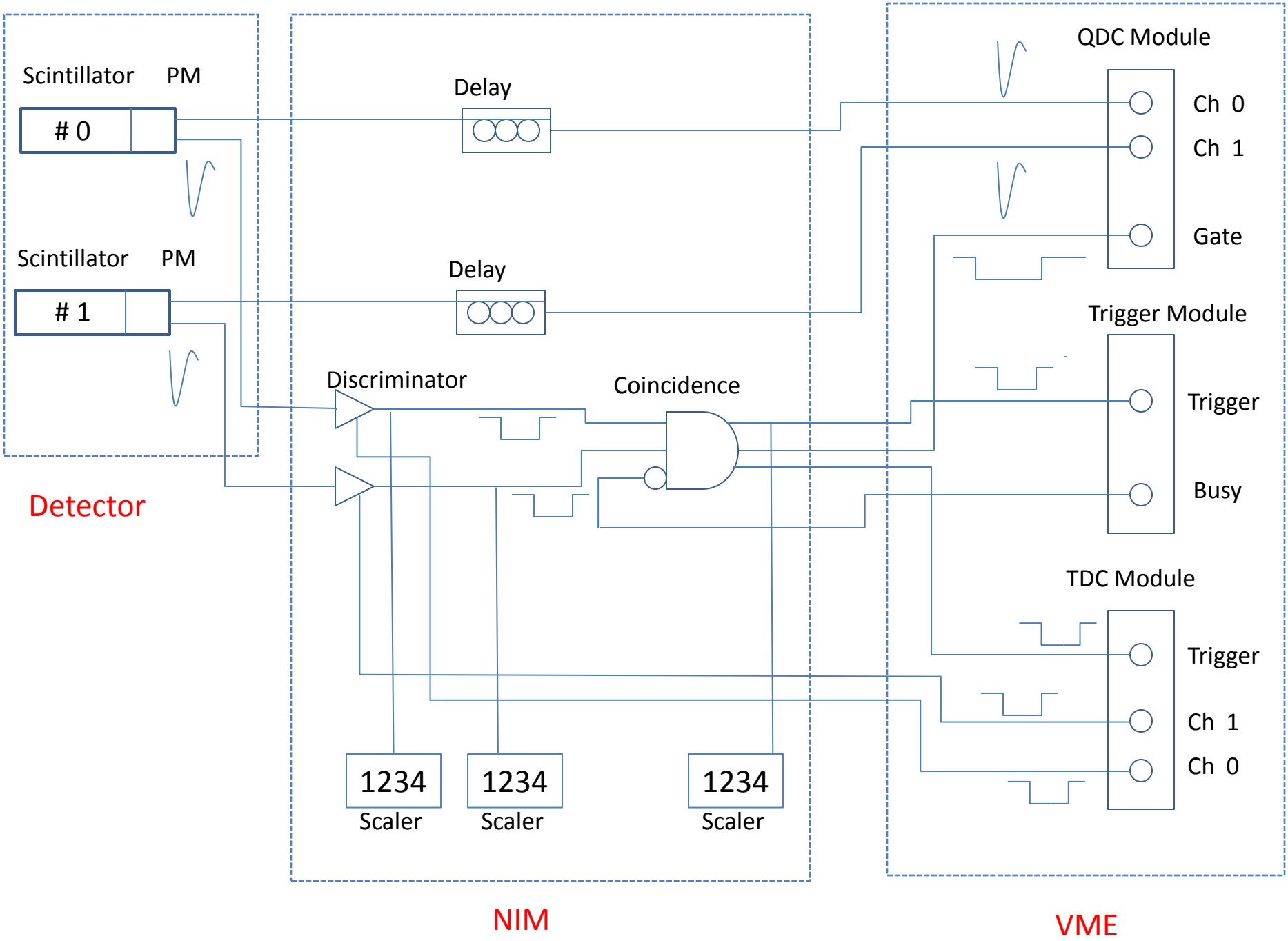
Scintillator
PM
0
Scintillator
PM
1
Detector
Delay
Delay
Discriminator
Coincidence
1234
Scaler
1234
Scaler
1234
Scaler
NIM
QDC Module
Ch 0
Ch 1
Gate
Trigger Module
Trigger
Busy
TDC Module
Trigger
Ch 1
Ch 0
VME